23.Drive Pinion Shaft Assembly

A: REMOVAL

1) Remove the manual transmission assembly from the vehicle. <Ref. to 6MT-34, REMOVAL, Manual Transmission Assembly.>
2) Prepare the transmission for overhaul. <Ref. to 6MT-39, Preparation for Overhaul.>
3) Remove the oil pipe, neutral position switch, back-up light switch and harness. <Ref. to 6MT-41, REMOVAL, Oil Pipe.> <Ref. to 6MT-43, REMOVAL, Neutral Position Switch.> <Ref. to 6MT-42, REMOVAL, Back-up Light Switch.>
4) Remove the extension case. <Ref. to 6MT-44, REMOVAL, Extension Case.>
5) Remove the transfer driven gear. <Ref. to 6MT-56, REMOVAL, Transfer Driven Gear.>
6) Remove the center differential. <Ref. to 6MT-58, REMOVAL, Center Differential.>
7) Remove the oil pump. <Ref. to 6MT-59, REMOVAL, Oil Pump.>
8) Remove the transmission case. <Ref. to 6MT-63, REMOVAL, Transmission Case.>
9) Remove the individual gear assemblies. <Ref. to 6MT-68, REMOVAL, Main Shaft Assembly.>
10) Remove the drive pinion shaft assembly.

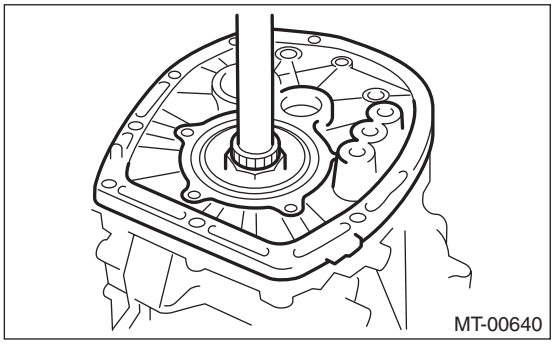

B: INSTALLATION

1) Remove any remaining gasket material from the drive plate and clutch housing.
2) Apply liquid gasket to the clutch housing.

Liquid gasket:
THREE BOND 1215 (Part No. 004403007)

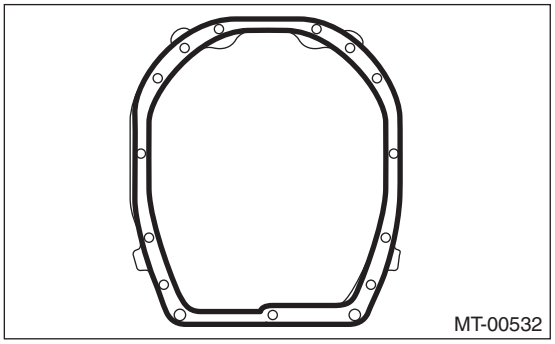

3) Install the individual gear assemblies. <Ref. to 6MT-69, INSTALLATION, Main Shaft Assembly.>
4) Install the transmission case. <Ref. to 6MT-64, INSTALLATION, Transmission Case.>
5) Install the oil pump. <Ref. to 6MT-61, INSTALLATION, Oil Pump.>
6) Install the center differential. <Ref. to 6MT-58, INSTALLATION, Center Differential.>
7) Install the transfer driven gear. <Ref. to 6MT-56, INSTALLATION, Transfer Driven Gear.>
8) Install the extension case. <Ref. to 6MT-44, INSTALLATION, Extension Case.>
9) Install the oil pipe, neutral position switch, back-up light switch and harness. <Ref. to 6MT-41, INSTALLATION, Oil Pipe.> <Ref. to 6MT-43, INSTALLATION, Neutral Position Switch.> <Ref. to 6MT-42, INSTALLATION, Back-up Light Switch.>
10) Install the manual transmission assembly to the vehicle. <Ref. to 6MT-36, INSTALLATION, Manual Transmission Assembly.>

C: DISASSEMBLY

NOTE:
Replace the drive pinion shaft and the hypoid driven gear as a set.
1) Remove the pipe and oil chamber.

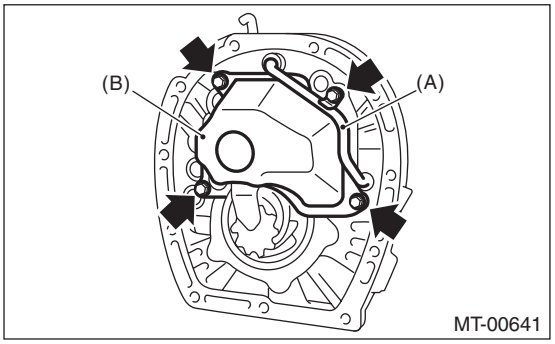

(A) Pipe
(B) Oil chamber

2) Remove the drive pinion shaft and shim from the adapter plate.

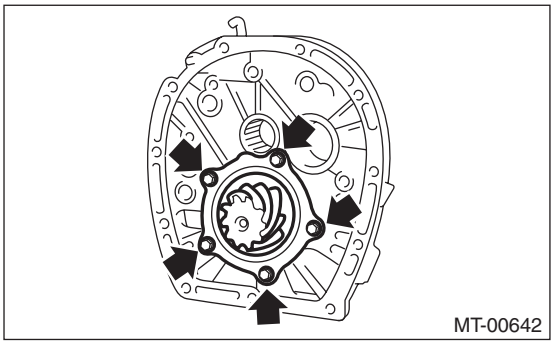

3) Affix the ST to the work table.
ST 18664AA000 BASE
4) Flatten the nut tab.

5) Attach ST3 to the locknut, and set the drive pinion shaft to the ST. Remove the lock nut and washer.
ST1 18667AA000 HOLDER
ST2 18664AA000 BASE
ST3 18621AA000 ADAPTER WRENCH

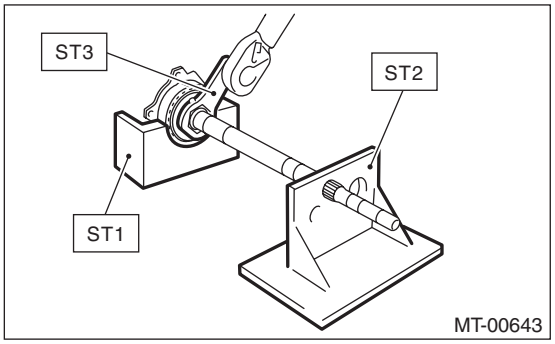

6) Using the ST, remove the taper roller bearing assembly.
ST 18723AA000 REMOVER

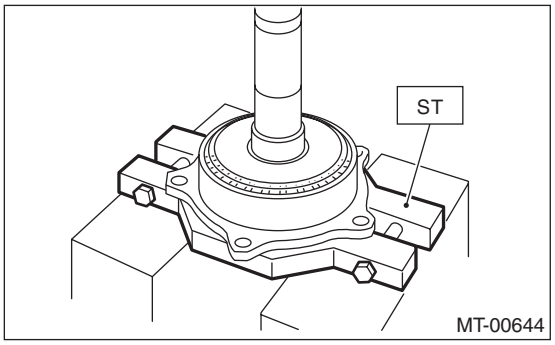

D: ASSEMBLY

1) Using the ST, measure drive pinion measurement “A”.

NOTE:
When selecting the drive pinion shim, refer to measurement “A”.
ST 398643600 GAUGE

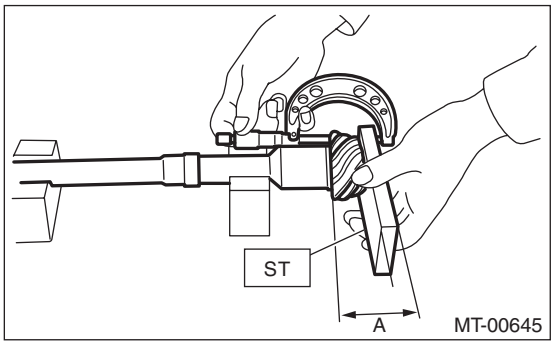

2) Using the ST and a press, attach the inner bearing inner race to the drive pinion shaft.
ST 18723AA000 REMOVER

CAUTION:
Do not apply pressure in excess of 40 kN (4.0 ton, 4.4 US ton, 3.9 Imp ton).

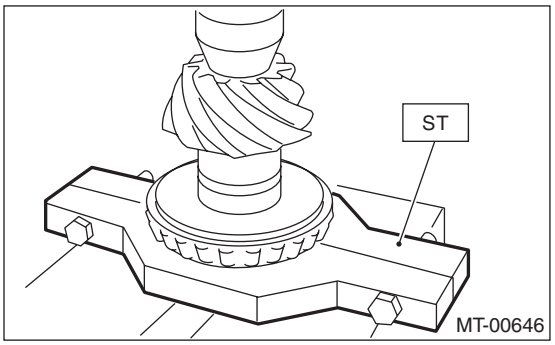

3) Using the ST and a press, attach the retainer and outer bearing inner race to the drive pinion shaft.
ST 18723AA000 REMOVER

NOTE:
Push in to a position where the bearing rotates smoothly.

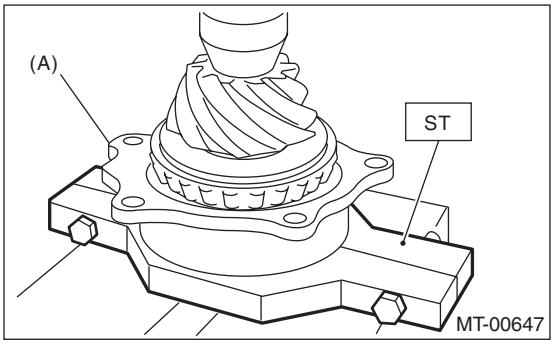

(A) Retainer

4) Attach the washer and a new lock nut.

5) Set the ST to the drive pinion, and tighten the lock nut.
ST1 18667AA000 HOLDER
ST2 18664AA000 BASE
ST3 18621AA000 ADAPTER WRENCH
ST4 18852AA000 TORQUE WRENCH

NOTE:
Tighten using the ST and the straight line torque wrench.

Tightening torque:
265 N·m (27.0 kgf-m, 195 ft-lb)

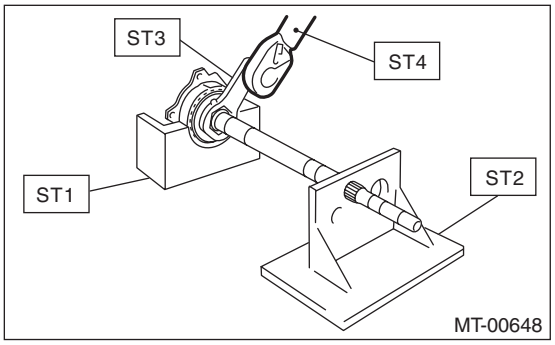

NOTE:
- When using a torque wrench other than ST4, use the calculation below to calculate and tighten the lock nut.
- Tighten using the ST and the straight line torque wrench.

T = L1/(0.1 + L1) × 285

T N·m (kgf-m, ft-lb)	Torque wrench setting
L1 m (in)	Torque wrench length
0.1 m (3.94 in)	Length of ST
285 N·m (29.0 kgf-m, 210 ft-lb)	Tightening torque (lock nut):

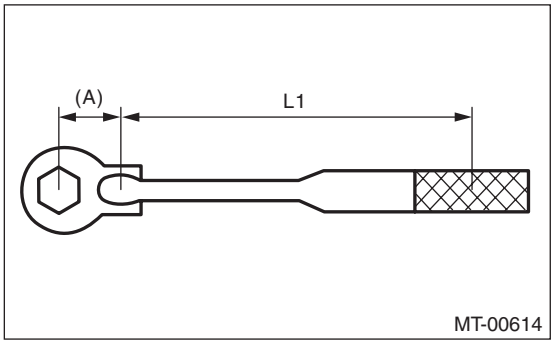

(A) 0.1 m (3.94 in)

6) Measure the starting torque. <Ref. to 6MT-97, INSPECTION, Drive Pinion Shaft Assembly.>

7) Using the ST, crimp the lock nut in two locations, with dimensions within “A” 37±0.5 mm (1.46±0.02 in).
ST 18670AA000 PUNCH

NOTE:
Do not damage the crimp area of the lock nut.

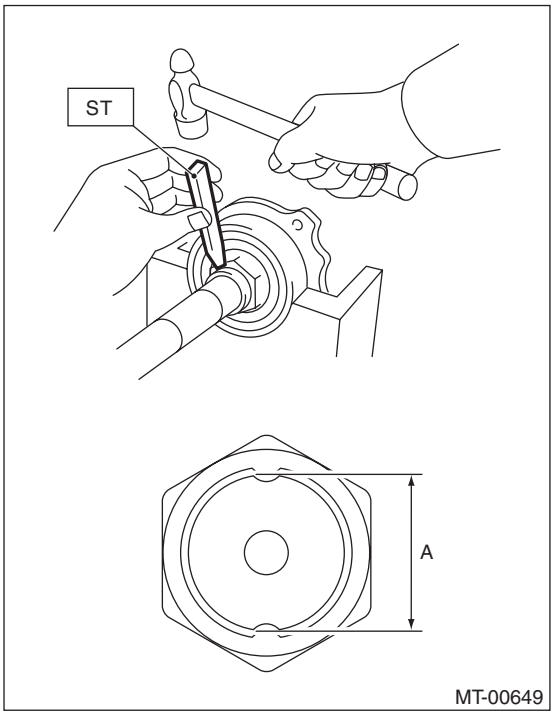

8) Using the ST, measure drive pinion measurement “B”.
ST 398643600 GAUGE

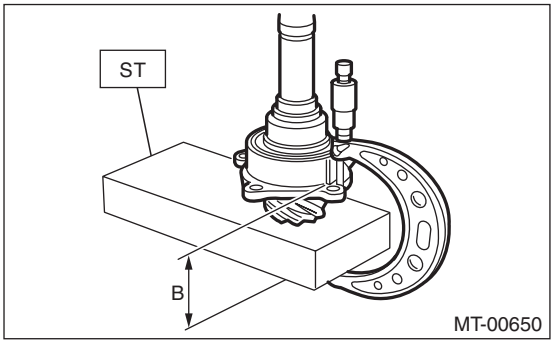

9) Calculate from the calculation below to select 1 or 2 drive pinion shims from the following table.
6.5±0.0625 mm – (B – A) [0.26±0.0025 in – (B – A)]

NOTE:
A: Measurement value in step 1)
B: Measurement value in step 8)

Drive pinion shim	
Part No.	Thickness mm (in)
32295AA270	0.15 (0.0059)
32295AA280	0.175 (0.0069)
32295AA290	0.20 (0.0079)
32295AA300	0.225 (0.0089)
32295AA310	0.25 (0.0098)
32295AA320	0.275 (0.0108)

10) Apply gear oil to the side face of the taper roller bearing, and attach the drive pinion shaft and the selected shims to the adapter plate.

Tightening torque:
54 N·m (5.5 kgf-m, 39.8 ft-lb)

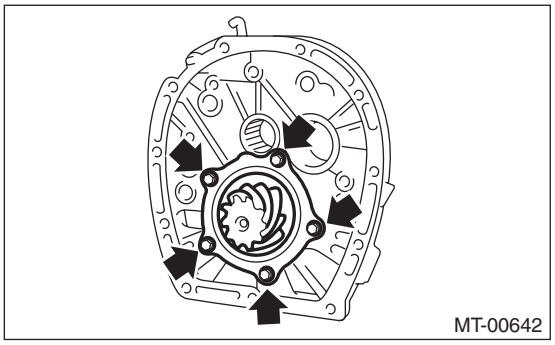

11) Install the oil chamber and pipe.

Tightening torque:
6.4 N·m (0.65 kgf-m, 4.7 ft-lb)

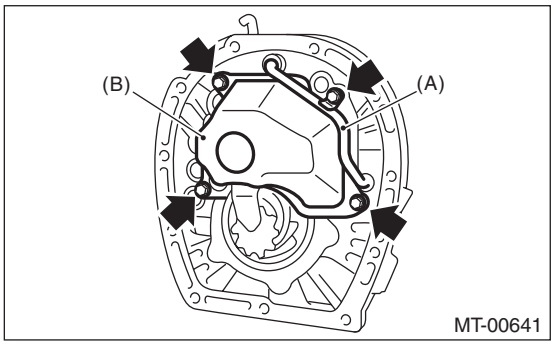

(A) Pipe
(B) Oil chamber

E: INSPECTION

1) Using a spring scale, measure the starting torque. If the starting torque is outside the specification range, replace the taper roller bearing.

Starting torque:
0 — 0.95 N (0 — 0.097 kgf, 0 — 0.21 lbf)

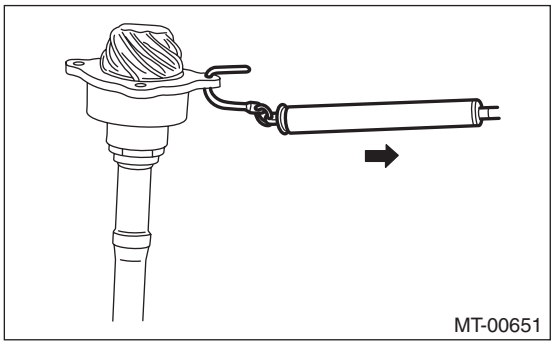

2) Gear
Replace gears in the following cases.
- When gear teeth are damaged or excessively worn.

3) Bearing
Replace the bearings in the following cases.
- Bearing wear, rusting or damage
- If the bearing does not rotate smoothly or an abnormal noise is emitted when turning.

4) Adapter plate
Replace the adapter plate in the following cases:
- Bearing wear, rusting or damage
- Damage of the adapter plate

5) Check that the pipes and pipe chambers are not damaged or clogged. Repair or replace if damaged or clogged.

F: ADJUSTMENT

1) Inspect and adjust the hypoid driven gear-to-drive pinion backlash. <Ref. to 6MT-104, HYPOID GEAR BACKLASH, ADJUSTMENT, Front Differential Assembly.>
2) Apply a thin uniform coat of red lead on the surfaces of 3 or 4 hypoid driven gear teeth.

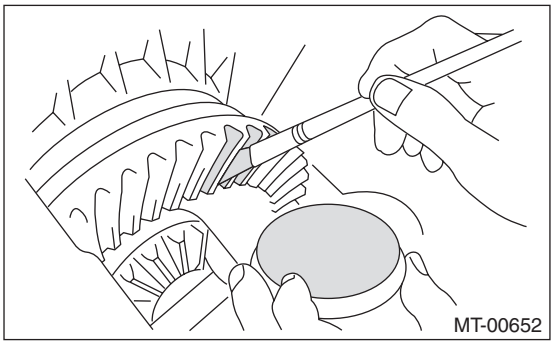

3) Attach the drive pinion shaft assembly to the clutch housing, and tighten with at least 4 bolts.

NOTE:
Install with the remaining liquid gasket, so that the clutch housing and the adapter plate will not be damaged.

Tightening torque:
50 N·m (5.1 kgf-m, 36.9 ft-lb)

4) Turn a few times using the ST.
ST 18631AA000 HANDLE

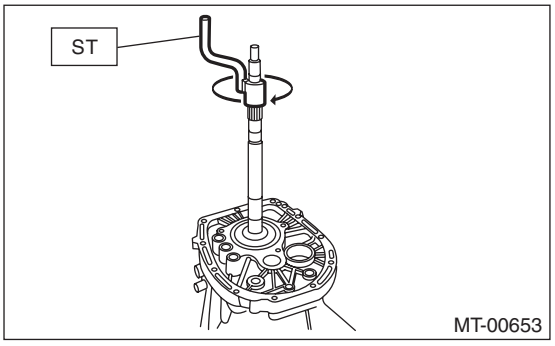

5) Remove the drive pinion shaft assembly, and inspect the mating condition of the teeth. If the mating is not correct, change shim thickness to adjust backlash.

- Correct tooth contact

Check item: Tooth contact surface is slightly shifted toward the toe side under a no-load condition. (When driving, it moves towards the heel side.)

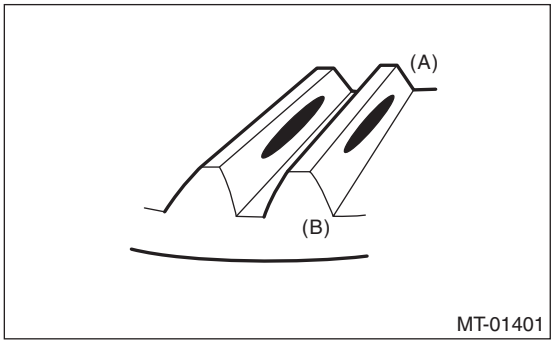

(A) Toe side
(B) Heel side

- Face contact

Check item: Backlash is too large.

Contact pattern

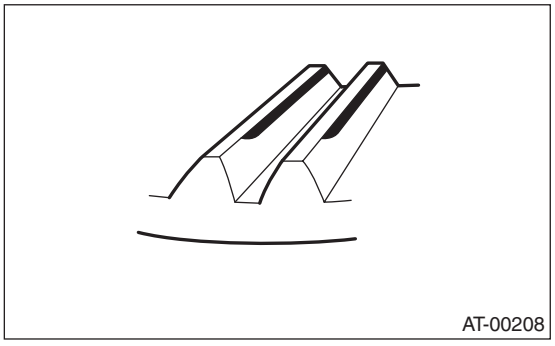

Corrective action: Reconfirm and adjust backlash.

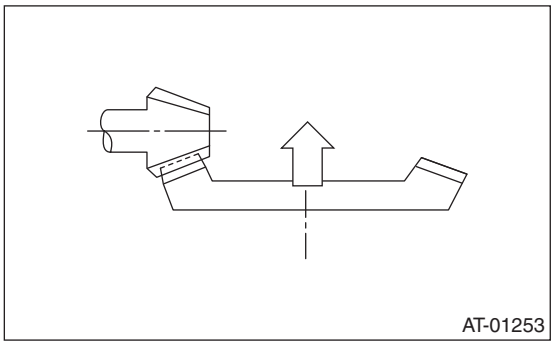

- Flank contact

Check item: Backlash is too small.

Contact pattern

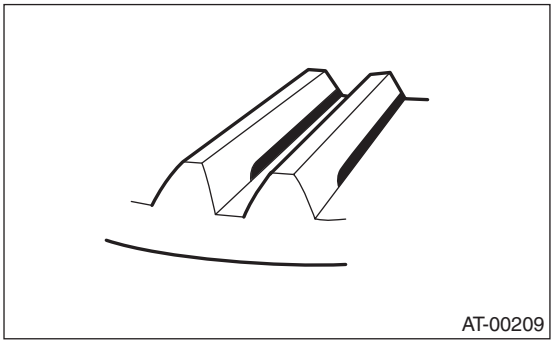

Corrective action: Reconfirm and adjust backlash.

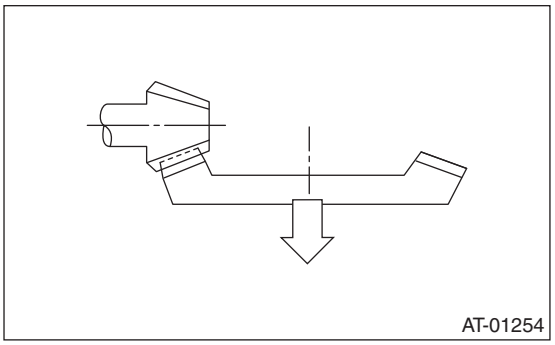

- Toe contact (inside contact)

Check item: Teeth contact area is too small.

Contact pattern

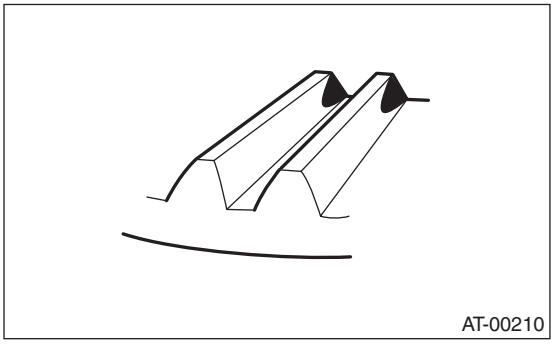

Corrective action: Reduce the thickness of the drive pinion shim according to the procedure for moving the drive pinion away from the driven gear.

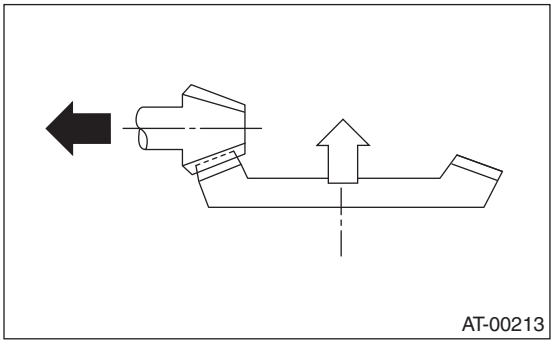

- Heel contact (outside end contact)

Check item: Teeth contact area is too small.

Contact pattern

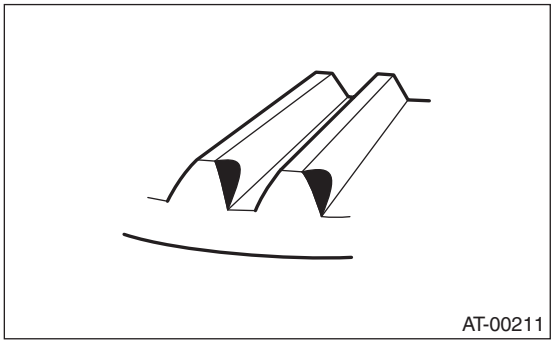
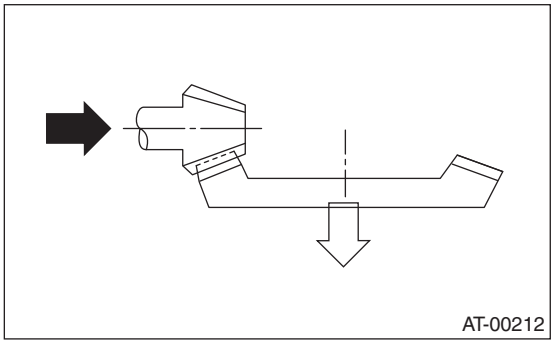
Corrective action: Increase thickness of the drive pinion shim according to the procedures for moving the drive pinion closer to the driven gear.